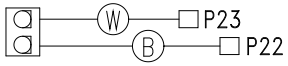


LIGHT (12V)

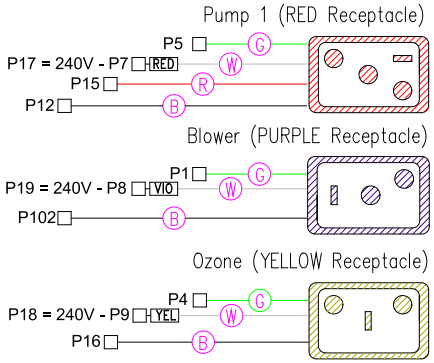


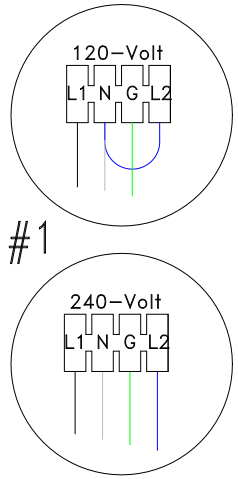


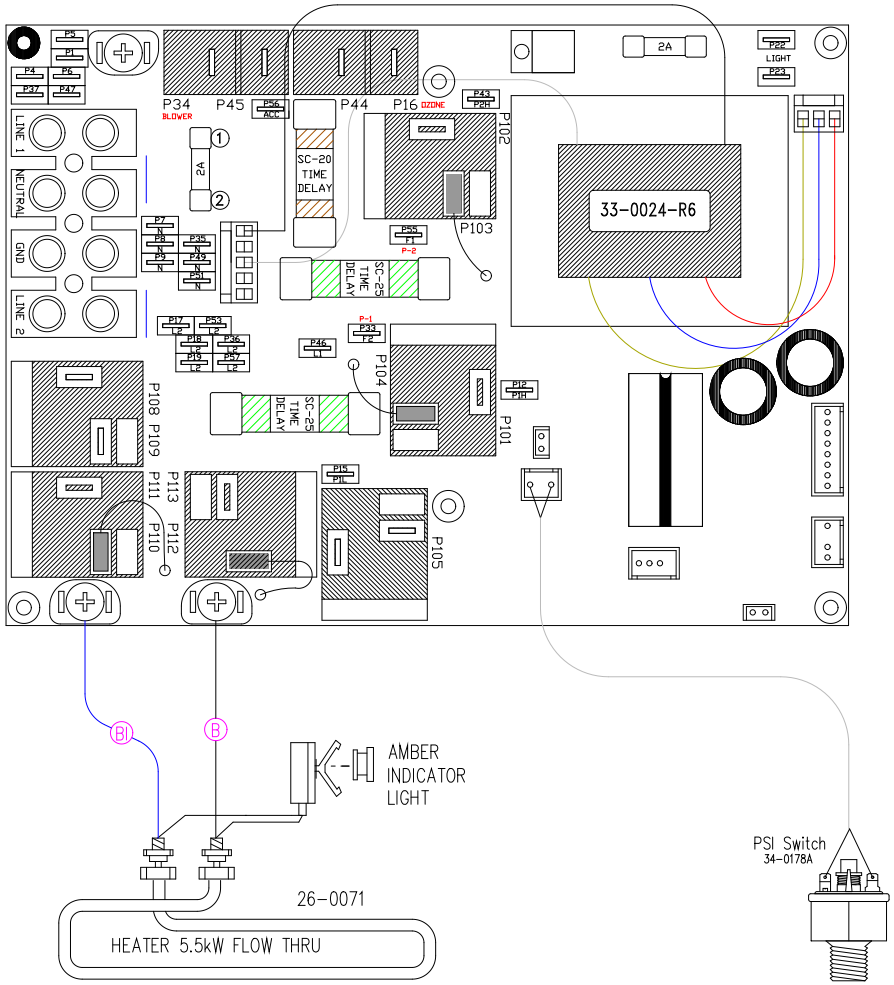


| LEGEND | |
|---|---|
| □ | – 1/4" QUICK CONNECT |
| ⊟ | – 1/4" QUICK CONNECT PIGGYBACK |
| ⊞ | – FORK CONNECTOR |
| ○ | – RING CONNECTOR |
| ▭ | – SOCKET CONNECTOR |
| △ | – PIN CONNECTOR |

HYDRO—QUIP
CORONA, CA (951) 273-7575

Manufacture Notes:

#1 Line 2 and Neutral need to be jumpered for 120V operation.

| Drawn | Rev |
|---|---|
| GC | 01 |
| Date 05.29.08 | |
| Diagram No. 6821 | |

Wire Color Code

| | |
|---|---|
| B – Black | G – Green |
| Br – Brown | Bl – Blue |
| R – Red | V – Violet |
| O – Orange | W – White |
| Y – Yellow | Gr – Gray |